STREET TRENCH DETAIL & SURFACE RESTORATION

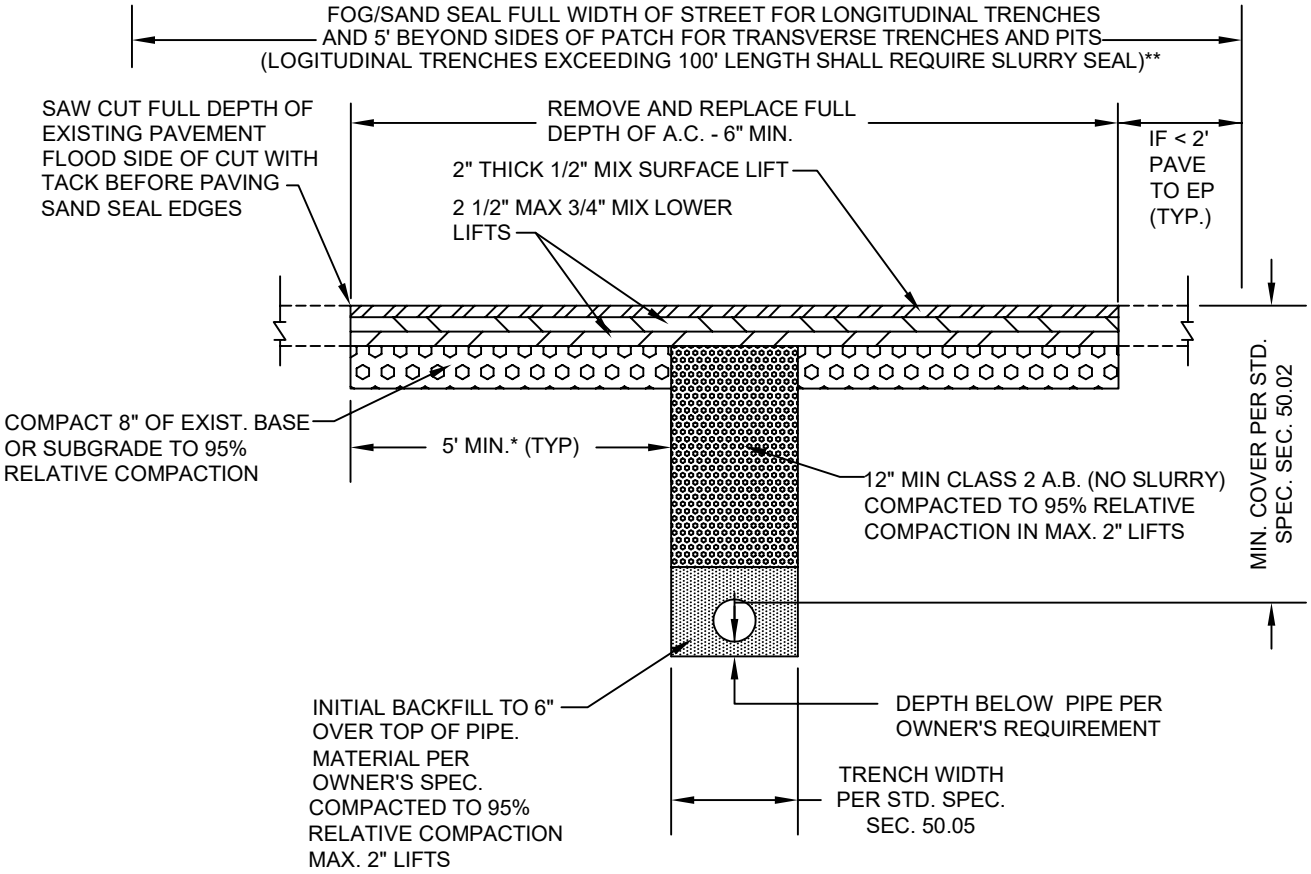

TYPICAL TRENCH SECTION

* WIDTH MAY BE REDUCED TO 24" ON CERTAIN STREETS SCHEDULED FOR OVERLAY WITHIN 18 MONTHS, SUBJECT TO APPROVAL BY THE CITY ENGINEER AND NEGOTIATED IN LIEU PAYMENT.

** CONSTRUCTION PROJECT THAT CREATES MULTIPLE TRANSVERSE TRENCHES MAY REQUIRE SLURRY SEAL DEPENDING ON SPECIFIC PROJECT INFORMATION AT TIME OF SUBMITTAL.

1. TEMPORARY PAVEMENT SHALL BE PLACED IN UNPLATED TRENCHES AT THE END OF EACH DAY. MATERIAL SHALL BE HIGH QUALITY PATCH MIX, SUCH AS "GRANITEPATCH," "QUICKPATCH" OR "DUROPATCH." CUTBACK SHALL NOT BE USED IN STREET AREAS FOR TEMPORARY PATCHING.
2. PERMANENT SURFACE RESTORATION SHALL BE INSTALLED NO SOONER THAN 10 DAYS AND NO MORE THAN 25 WORKING DAYS AFTER TEMPORARY SURFACE RESTORATION IS FIRST PUT IN PLACE.
3. LARGE TRENCHING CONSTRUCTION PROJECTS MAY HAVE ADDITIONAL REQUIREMENTS IMPOSED AS CONDITIONS OF APPROVAL DEPENDING ON THE SCOPE OF WORK, SCHEDULE, AND LOCATION OF THE PROJECT.

TOWN OF ATHERTON STANDARD DRAWING	STREET TRENCH DETAIL & SURFACE RESTORATION	April, 2007
		11